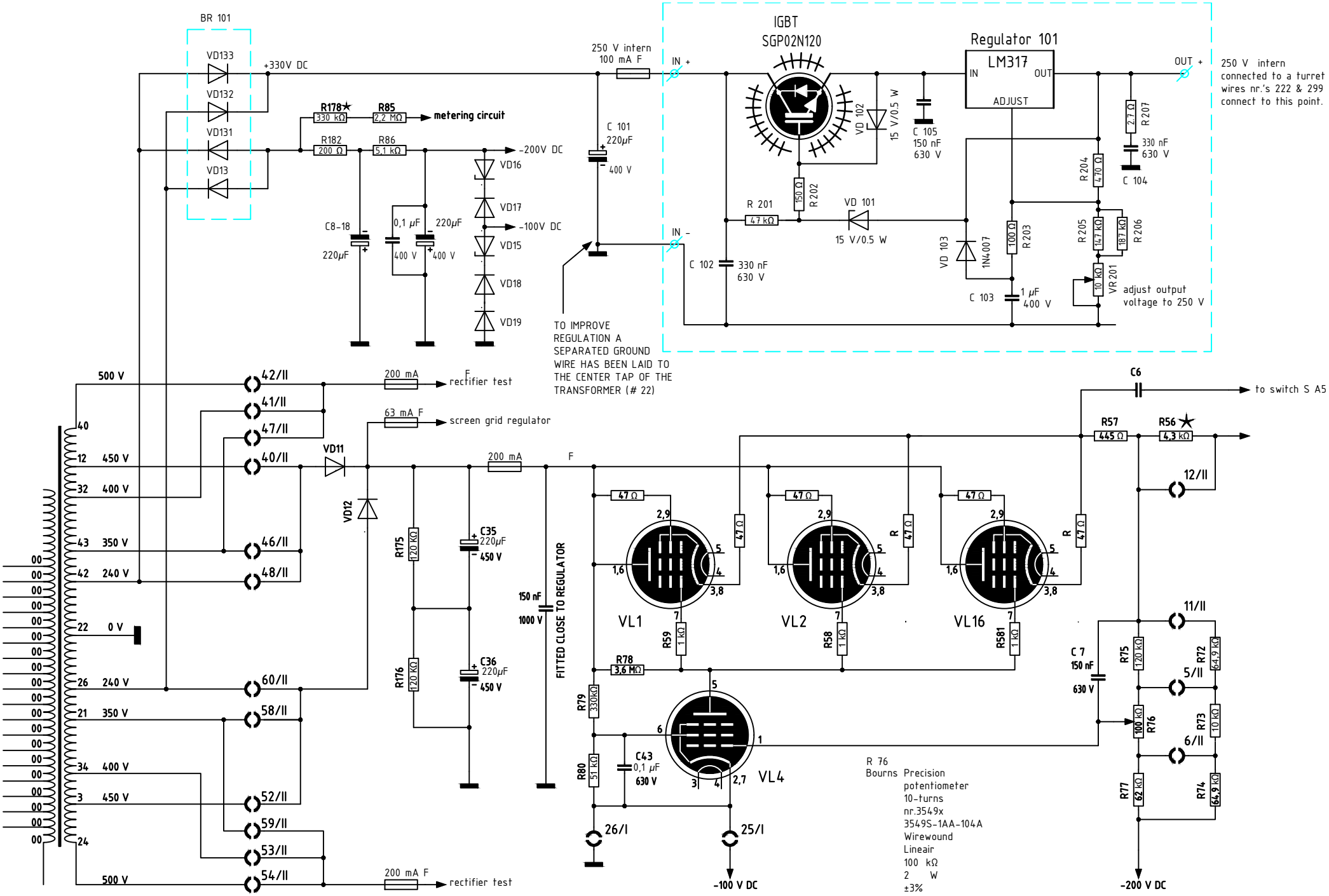
BR 101
VD133
VD132
VD131
VD13
+330V DC
R178★ 330 kΩ
R85 2,2 MΩ
metering circuit
R182 200 Ω
R86 5,1 kΩ
-200V DC
VD16
VD17
-100V DC
VD15
VD18
VD19
C8-18 220µF
0,1 µF 400 V
220µF 400 V
250 V intern 100 mA F
C 101 220µF 400 V
IN +
IGBT SGP02N120
Regulator 101
LM317
IN
OUT
ADJUST
OUT +
250 V intern connected to a turret wires nr.'s 222 & 299 connect to this point.
VD 102 15 V/0.5 W
C 105 150 nF 630 V
R 202 150 Ω
R 201 47 kΩ
VD 101 15 V/0.5 W
IN -
C 102 330 nF 630 V
VD 103 1N4007
R 203 100 Ω
C 103 1 µF 400 V
R 204 470 Ω
R 205 147 kΩ
R 206 187 kΩ
VR 201 10 kΩ
adjust output voltage to 250 V
R 207 2,7 Ω
330 nF 630 V
C 104
TO IMPROVE REGULATION A SEPARATED GROUND WIRE HAS BEEN LAID TO THE CENTER TAP OF THE TRANSFORMER (# 22)
500 V
42/II
41/II
47/II
40/II
46/II
48/II
60/II
58/II
52/II
59/II
53/II
54/II
200 mA F
rectifier test
63 mA F
screen grid regulator
VD11
VD12
R175 120 kΩ
R176 120 kΩ
C35 220µF 450 V
C36 220µF 450 V
150 nF 1000 V
FITTED CLOSE TO REGULATOR
C6
to switch S A5
R57 445 Ω
R56★ 4,3 kΩ
12/II
11/II
5/II
6/II
VL1
VL2
VL16
VL4
R59 1 kΩ
R58 1 kΩ
R581 1 kΩ
R78 3,6 MΩ
R79 330kΩ
R80 51 kΩ
C43 0,1 µF 630 V
26/I
25/I
-100 V DC
C 7 150 nF 630 V
R75 120 kΩ
R76 100 kΩ
R77 62 kΩ
R72 64,9 kΩ
R73 10 kΩ
R74 64,9 kΩ
-200 V DC
R 76 Bourns Precision potentiometer 10-turns nr.3549x 3549S-1AA-104A Wirewound Lineair 100 kΩ 2 W ±3%
★SOME UNITS ARE FITTED WITH A 1,8 KΩ FOR R56